UniFi® Protect Smart Sensor

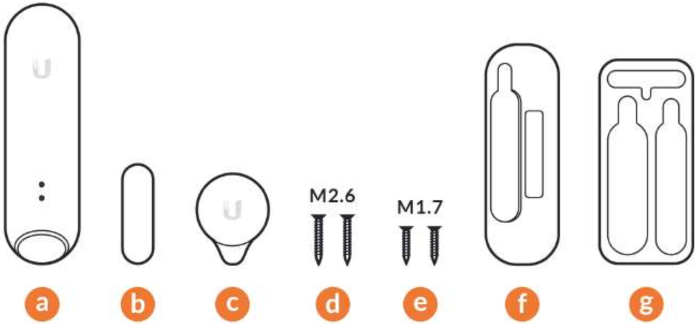
M2.6
M1.7
a
b
c
d
e
f
g

1

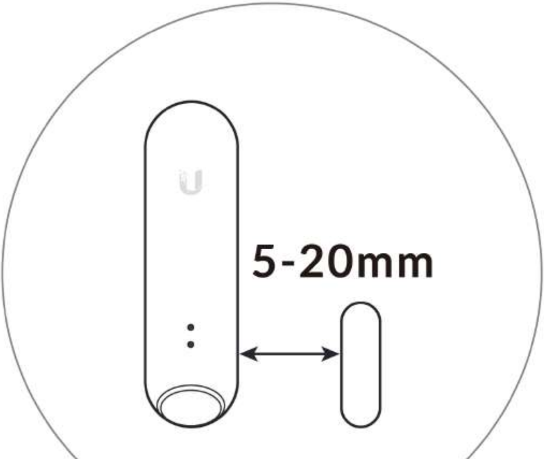

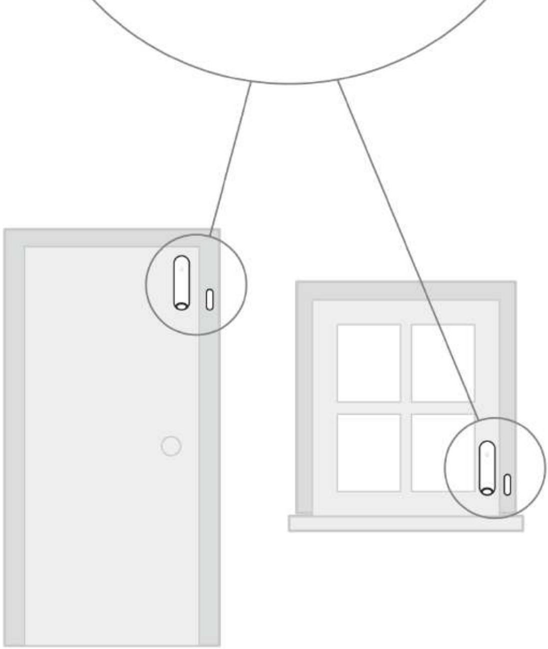

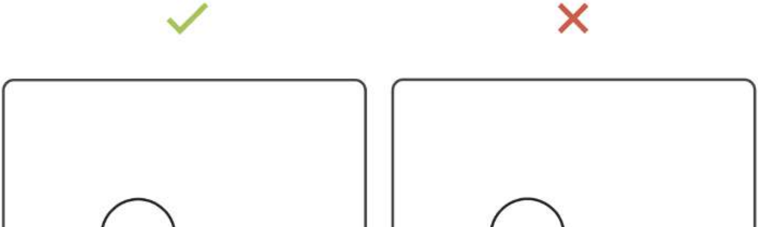

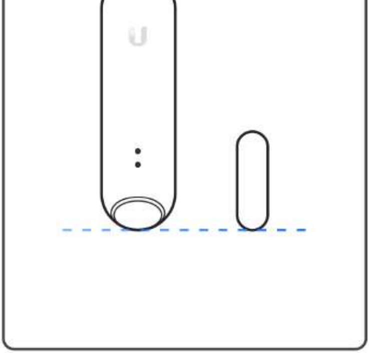

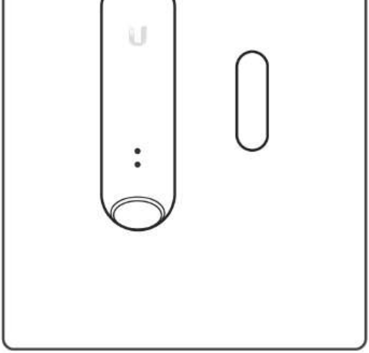

A

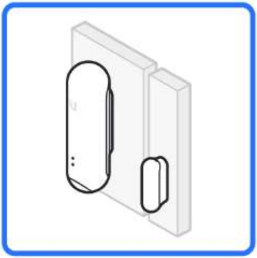

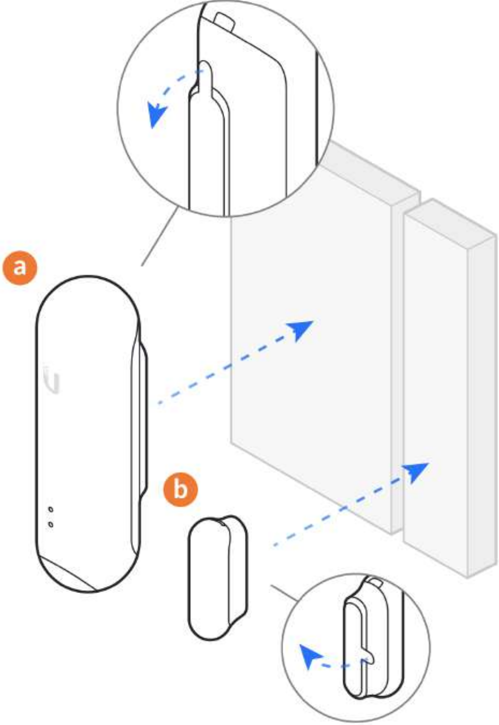

B

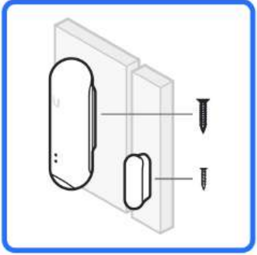

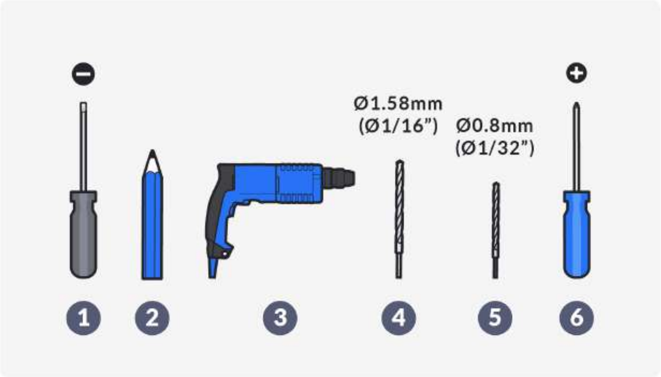
⊖
⊕
Ø1.58mm
(Ø1/16”)
Ø0.8mm
(Ø1/32”)
1
2
3
4
5
6

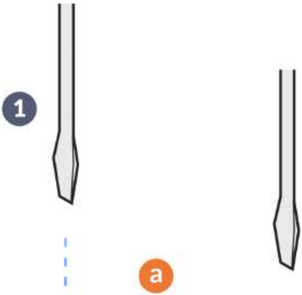

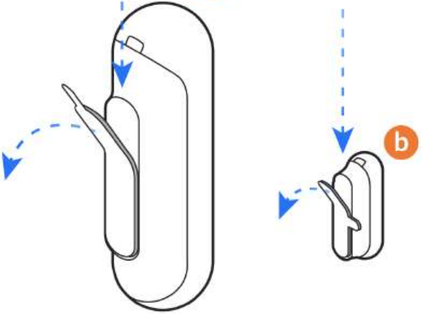

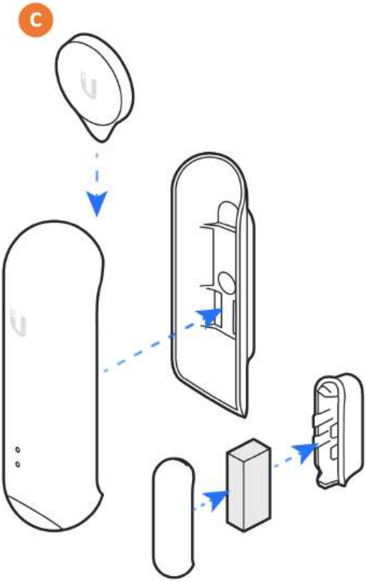

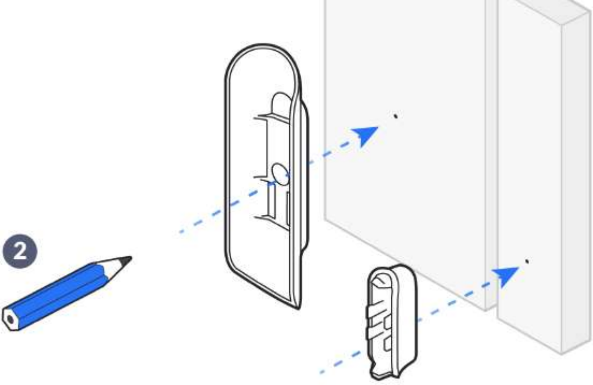

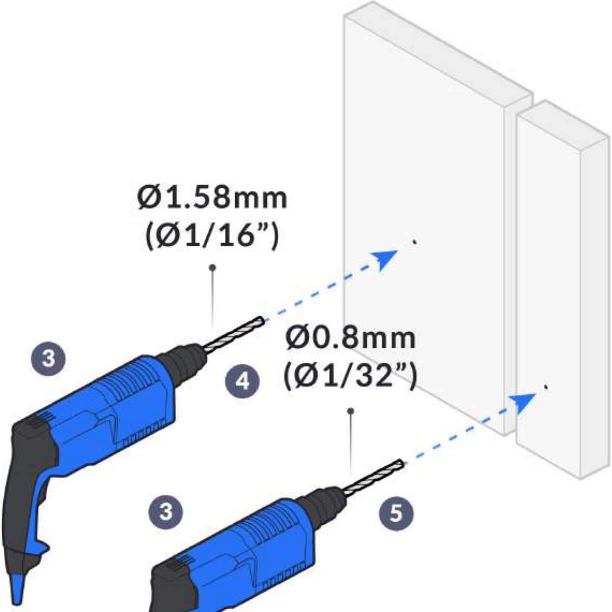
Ø1.58mm
(Ø1/16”)
3
4
Ø0.8mm
(Ø1/32”)
3
5

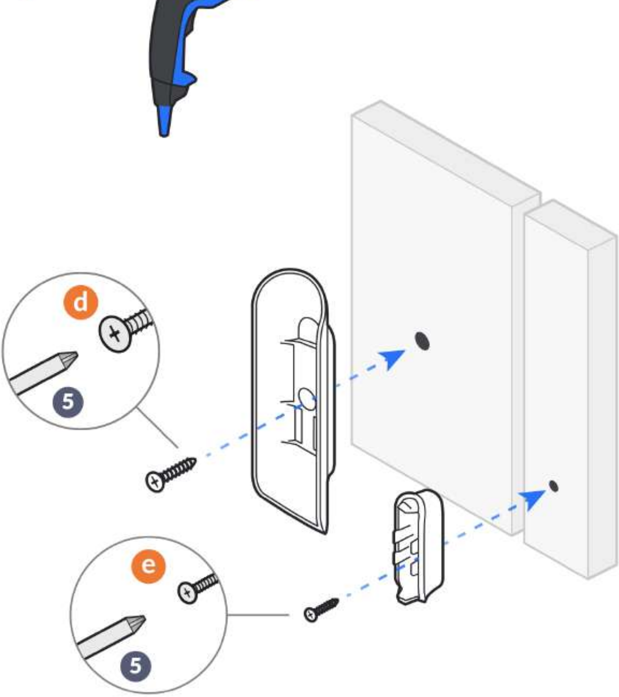

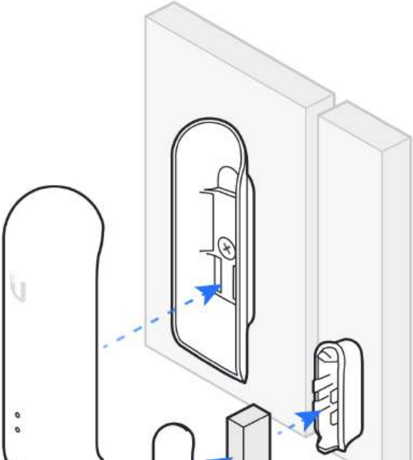

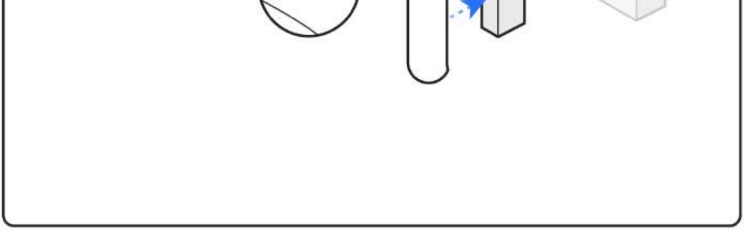

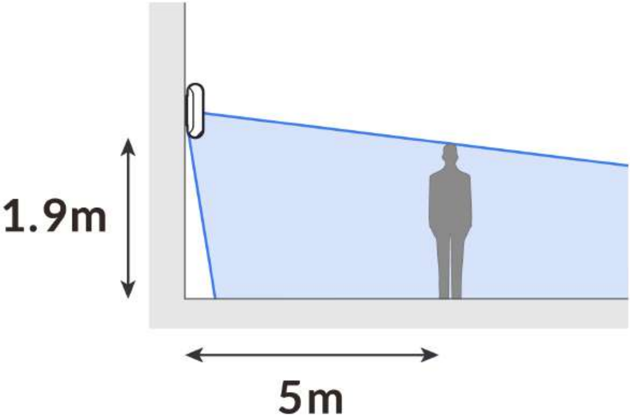

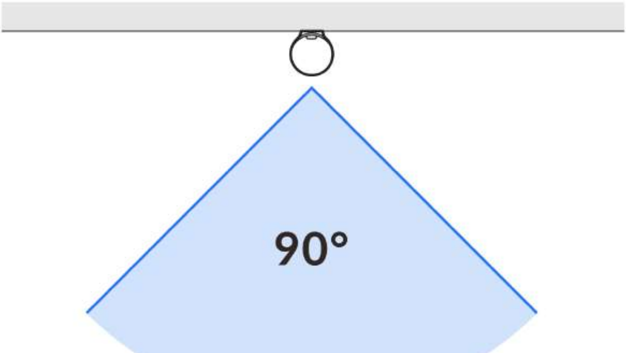

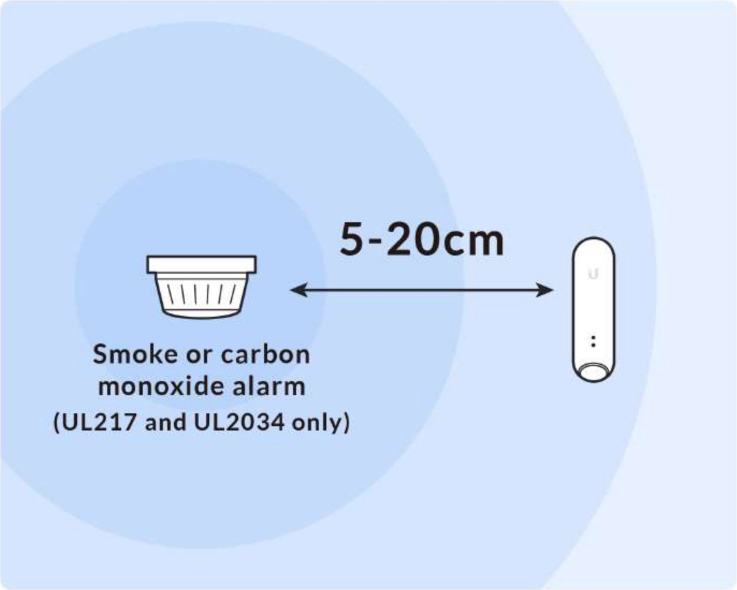
5-20cm
Smoke or carbon monoxide alarm
(UL217 and UL2034 only)

C

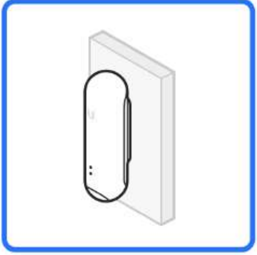

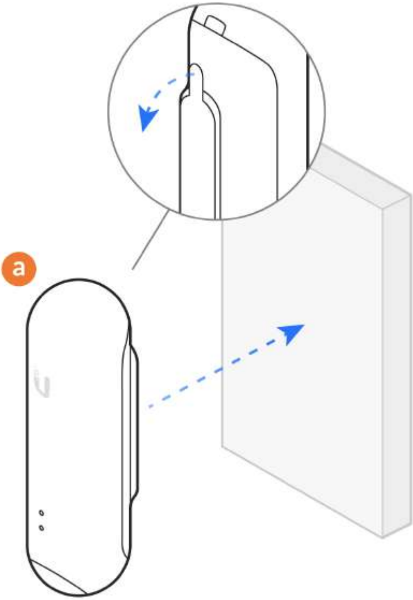

D

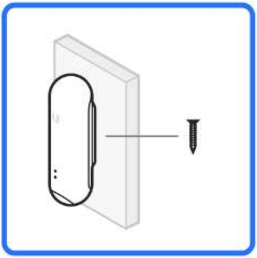

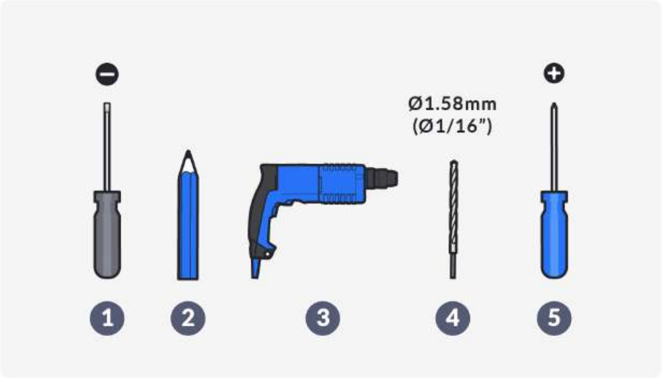
⊖
Ø1.58mm
(Ø1/16")
⊕
1
2
3
4
5

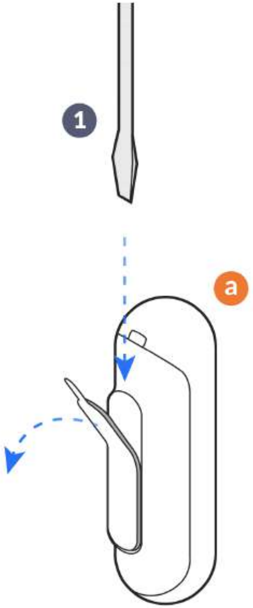

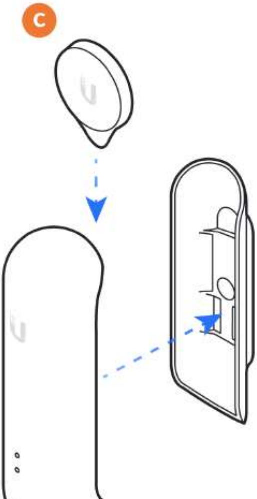

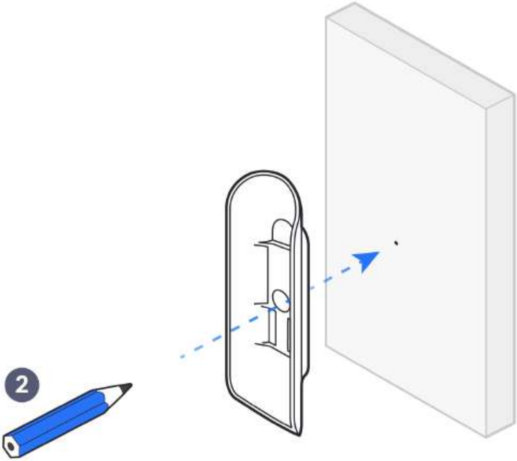

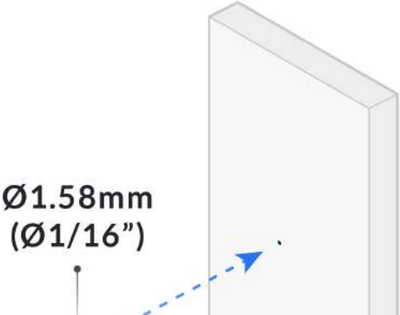
Ø1.58mm
(Ø1/16”)

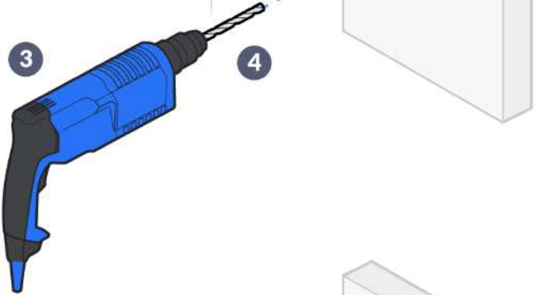

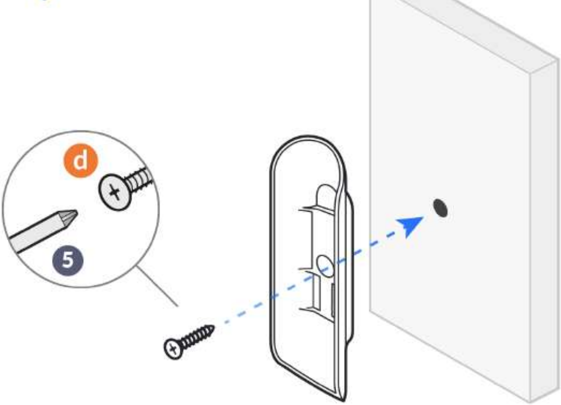

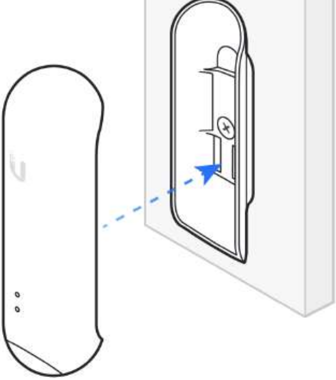

E

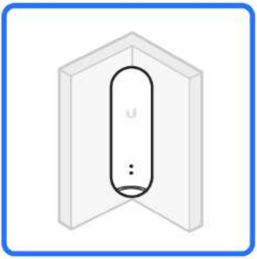

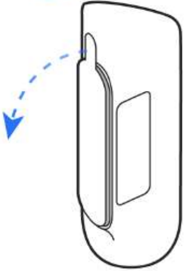

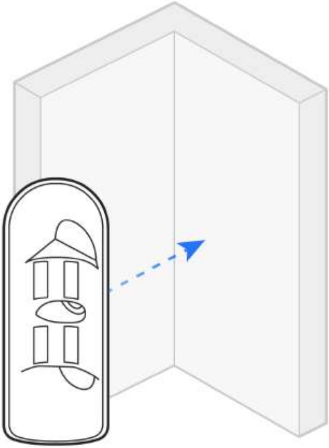

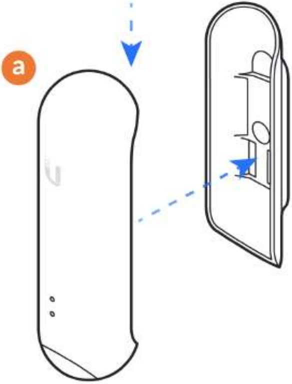

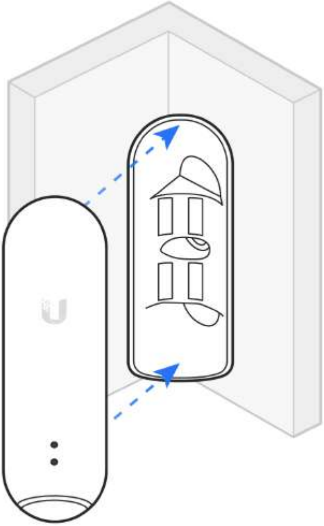

F

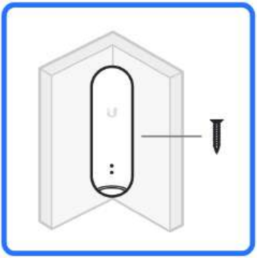

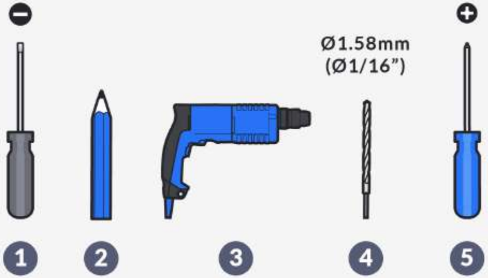
Ø1.58mm
(Ø1/16")
1
2
3
4
5

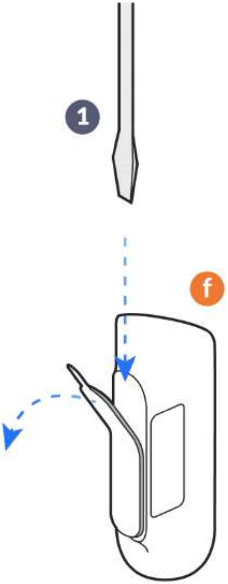

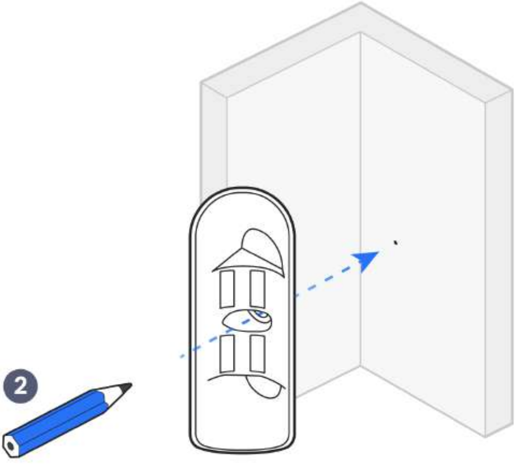

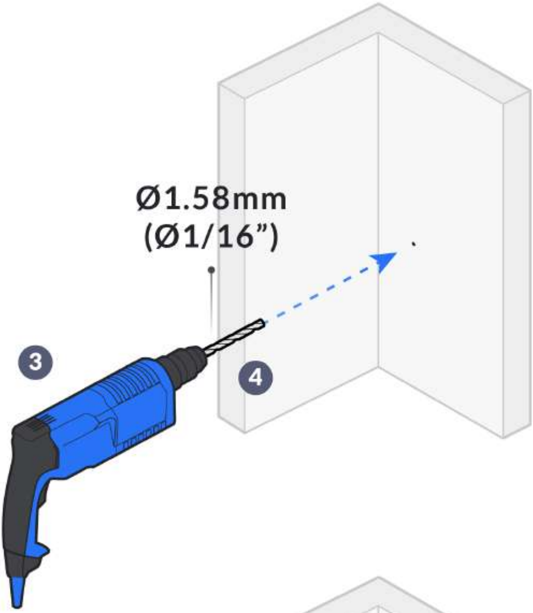
Ø1.58mm
(Ø1/16”)
3
4

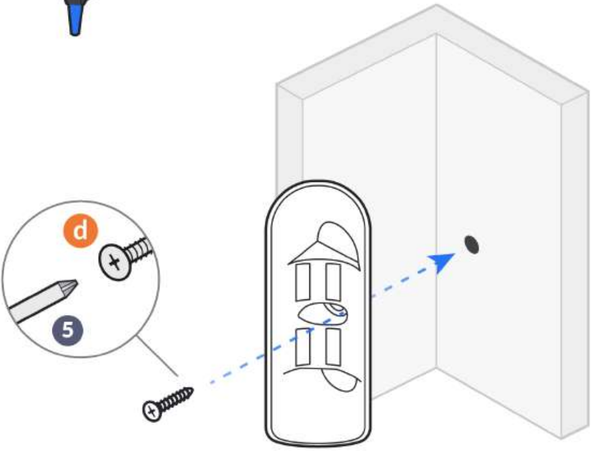

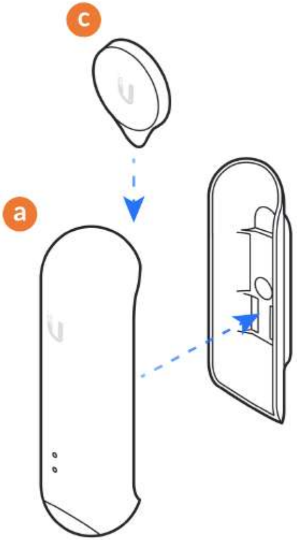

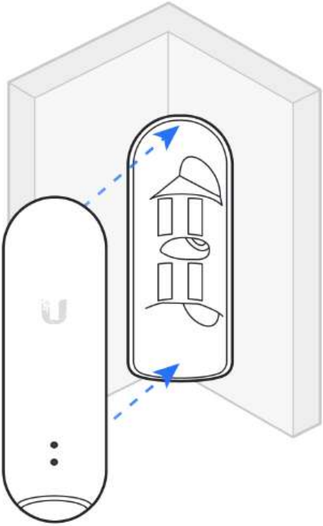

2

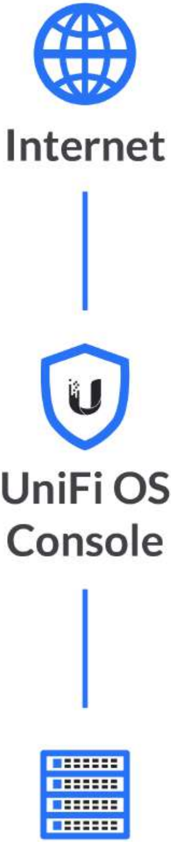
Internet
UniFi OS Console

Switch

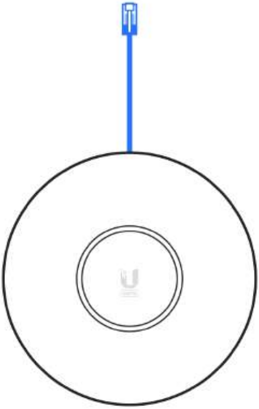

UniFi 6 Access Point Required*
(U6 Lite, Pro, or Long-range)

*Only GA models with compatible firmware.
See requirements on our store page.

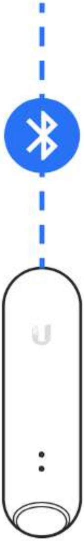

3

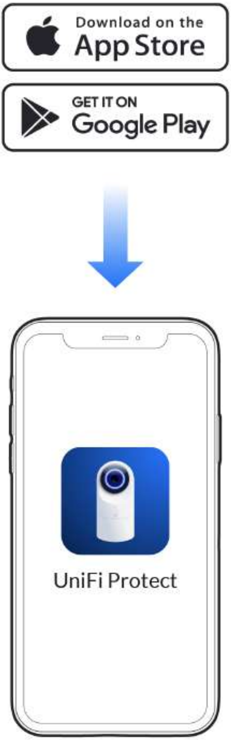
Download on the
App Store
GET IT ON
Google Play
UniFi Protect

Get Answers
help.ui.com

UI Support

©2019-2021 Ubiquiti Inc. All rights reserved. Ubiquiti, Ubiquiti Networks, the Ubiquiti U logo, UniFi Protect, and UniFi are trademarks or registered trademarks of Ubiquiti Inc. in the United States and in other countries. App Store and the Apple logo are trademarks of Apple Inc., registered in the U.S. and other countries. Google Play and the Google Play logo are trademarks of Google LLC. All other trademarks are the property of their respective owners.